History

Version	Date	Worker	Comments
01.00	01.06.2016	StE	- creation
01.01	24.06.2016	StE	- matching
01.02	07.02.2017	StE	- IO adapted description and Softwareupdate
01.03	23.02.2017	StE	- removing Softwareupdate - The both Jumper are concluded for DEM-Module

INTUITY Service Training
Overview Boards

Contents

1.1 Transmitter connection curcuit board/TX- Board 2
1.2 DOS-Platine 2
1.3 ASB-Board 4
1.3.1 Overview ASB 4
1.3.2 Testpoint 5
1.3.3 Overview DEM 6
1.4 Receiver Board 8
2 Overview of the control system 9
2.1 IO Board 9
2.1.1 Set up and effectiveness 9
2.1.2 Intuity / IO-Board 11

1. Overview of curcuit boards in the search coil

1.1 Transmitter connection curcuit board/TX- Board

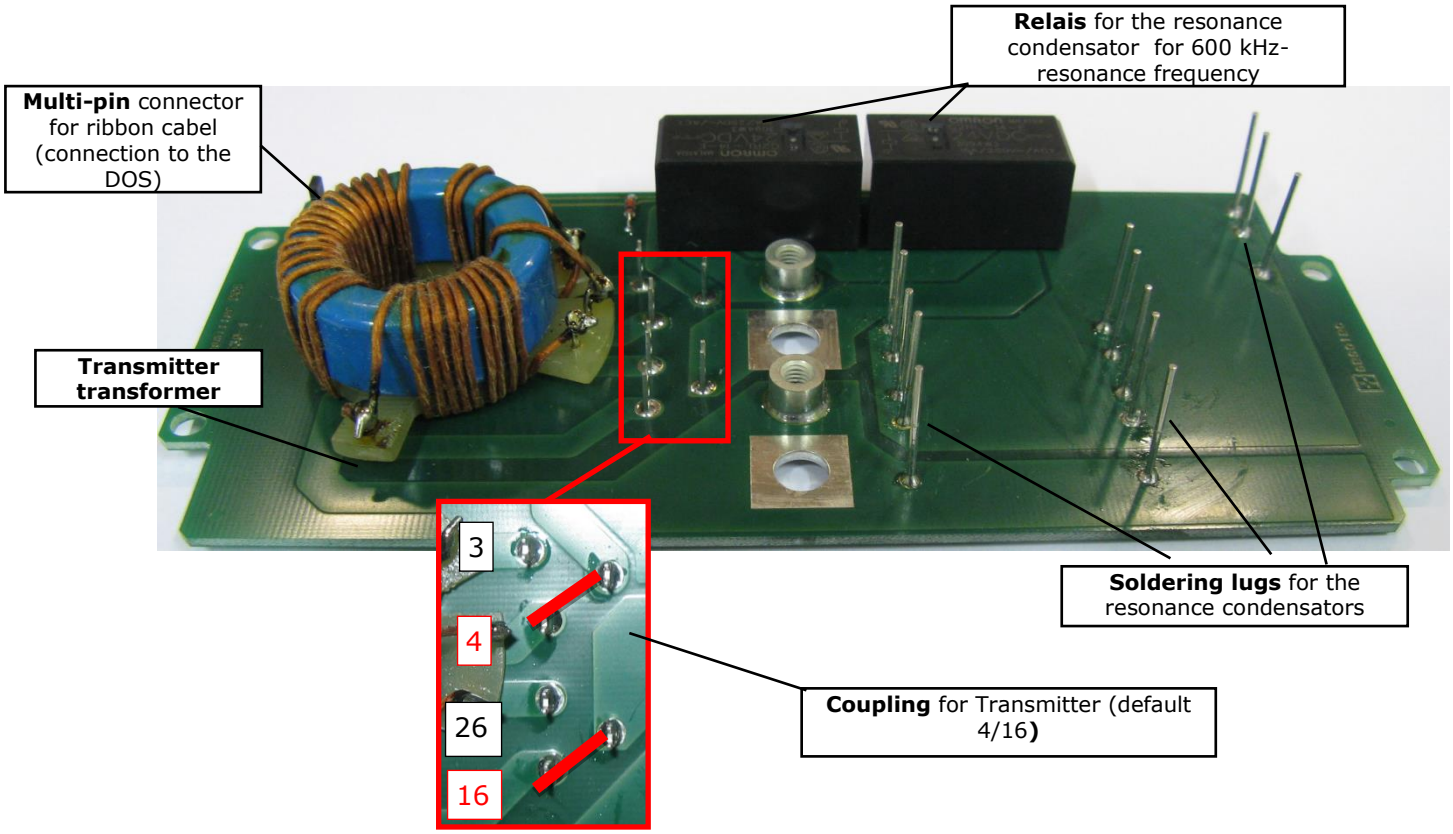

1.2 DOS-Platine

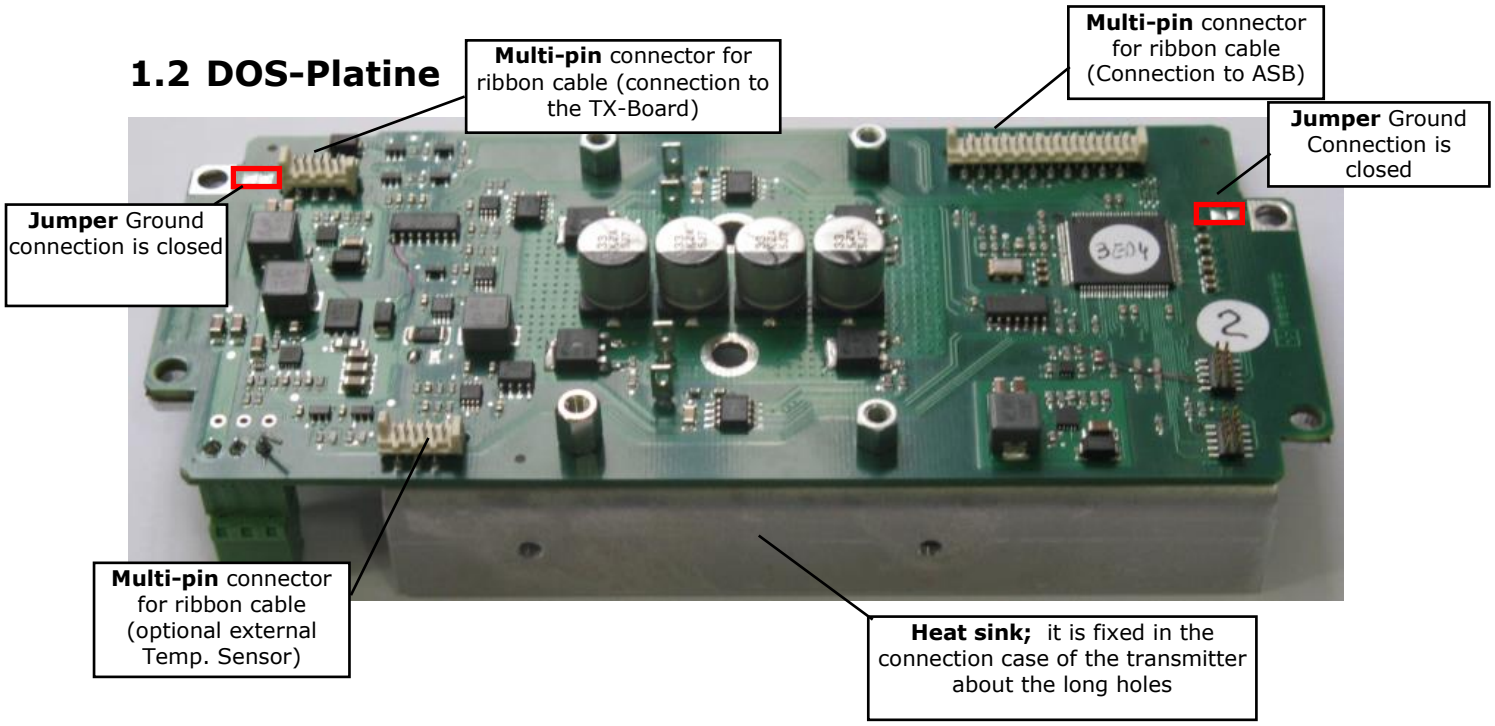

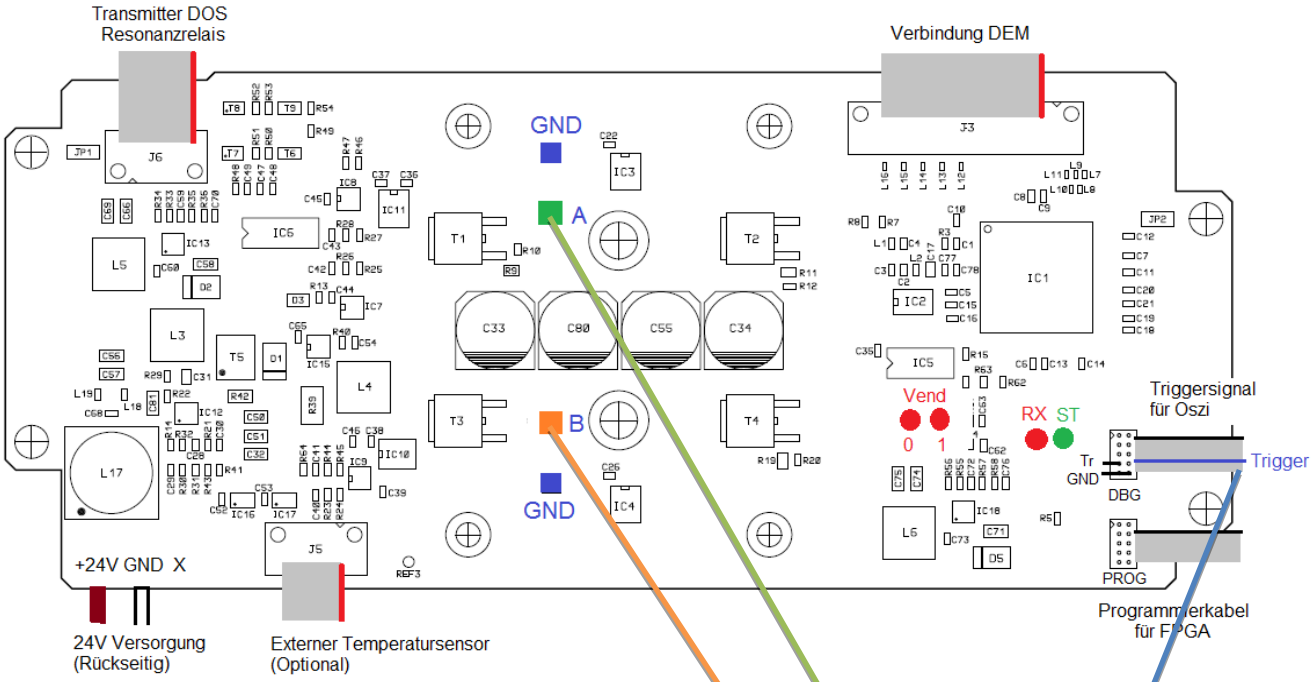

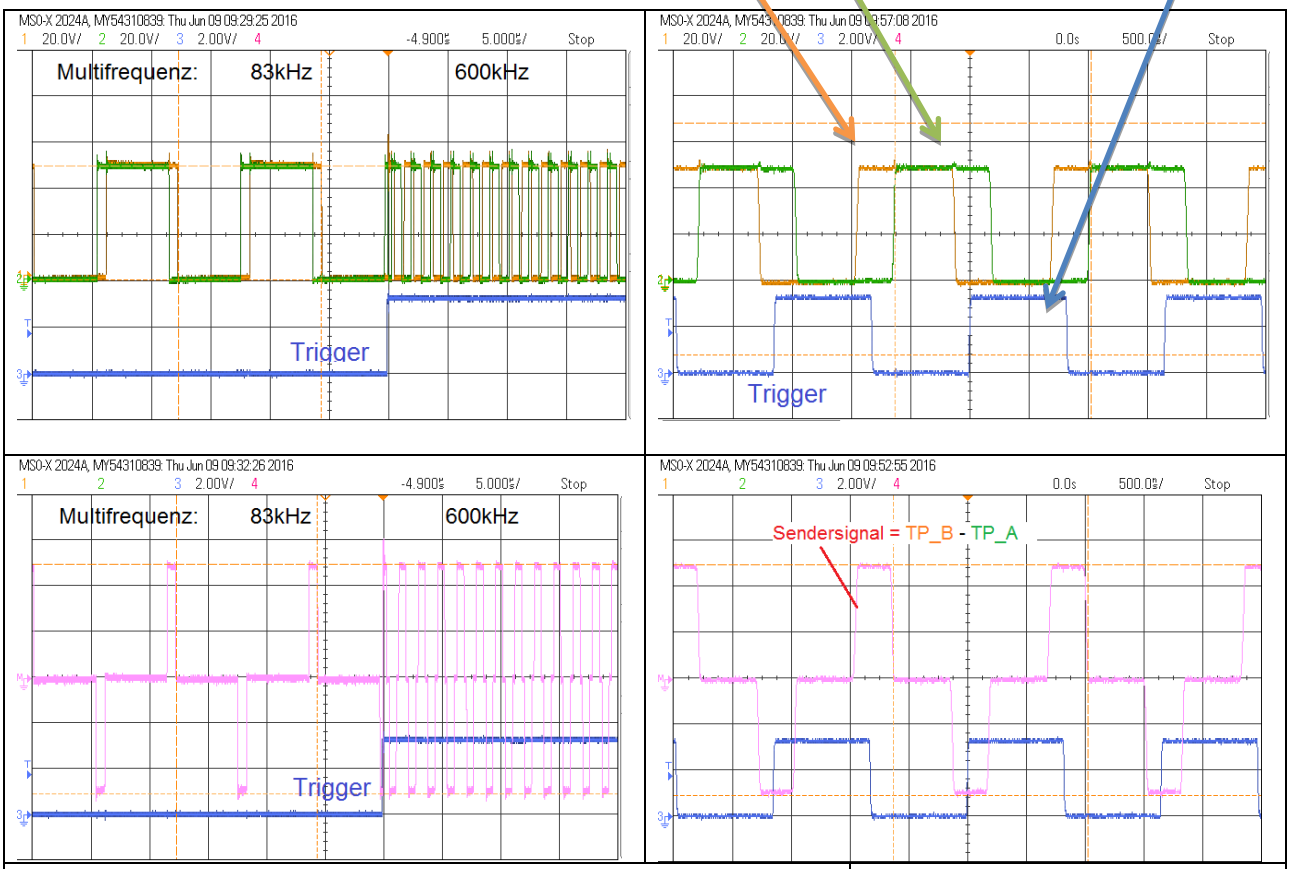

LED RX briefly blinks if communication takes place

LED ST shines permanently if everything is OK.
- flashes 2 x: Output stage over current shut down
- flashes 3 x: Output stage over temperature shut down
- flashes 4 x: Receiver error SPI
- flashes 5 x: Transmitter error SPI

LEDs Vend (0 1)	Endstufenspannung
● ●	50V
○ ●	40V
● ○	30V
○ ○	24V

1.3 ASB-Board

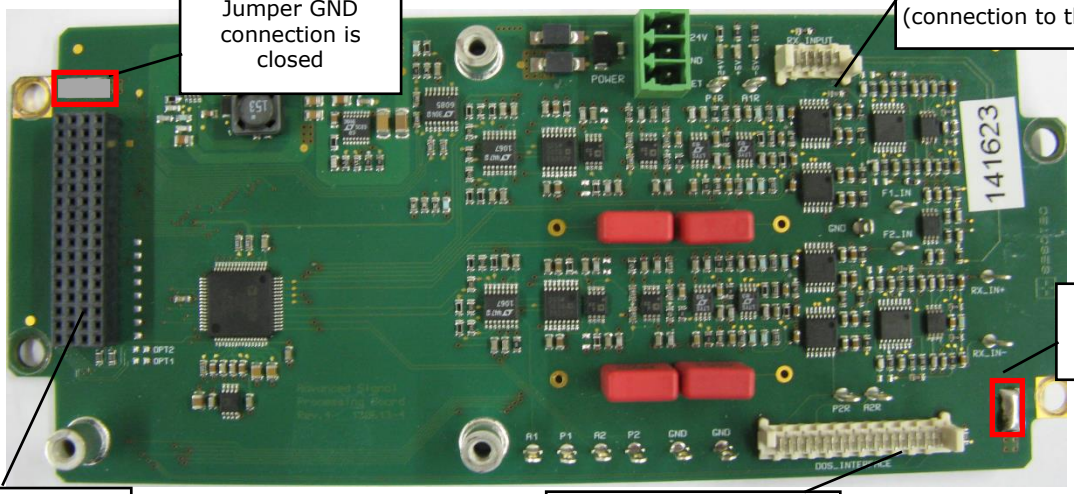

1.3.1 Overview ASB

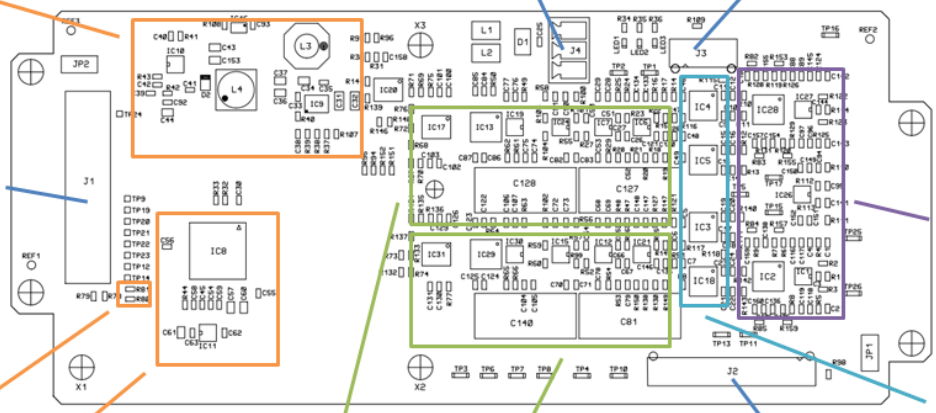

1.3.2 Testpoint

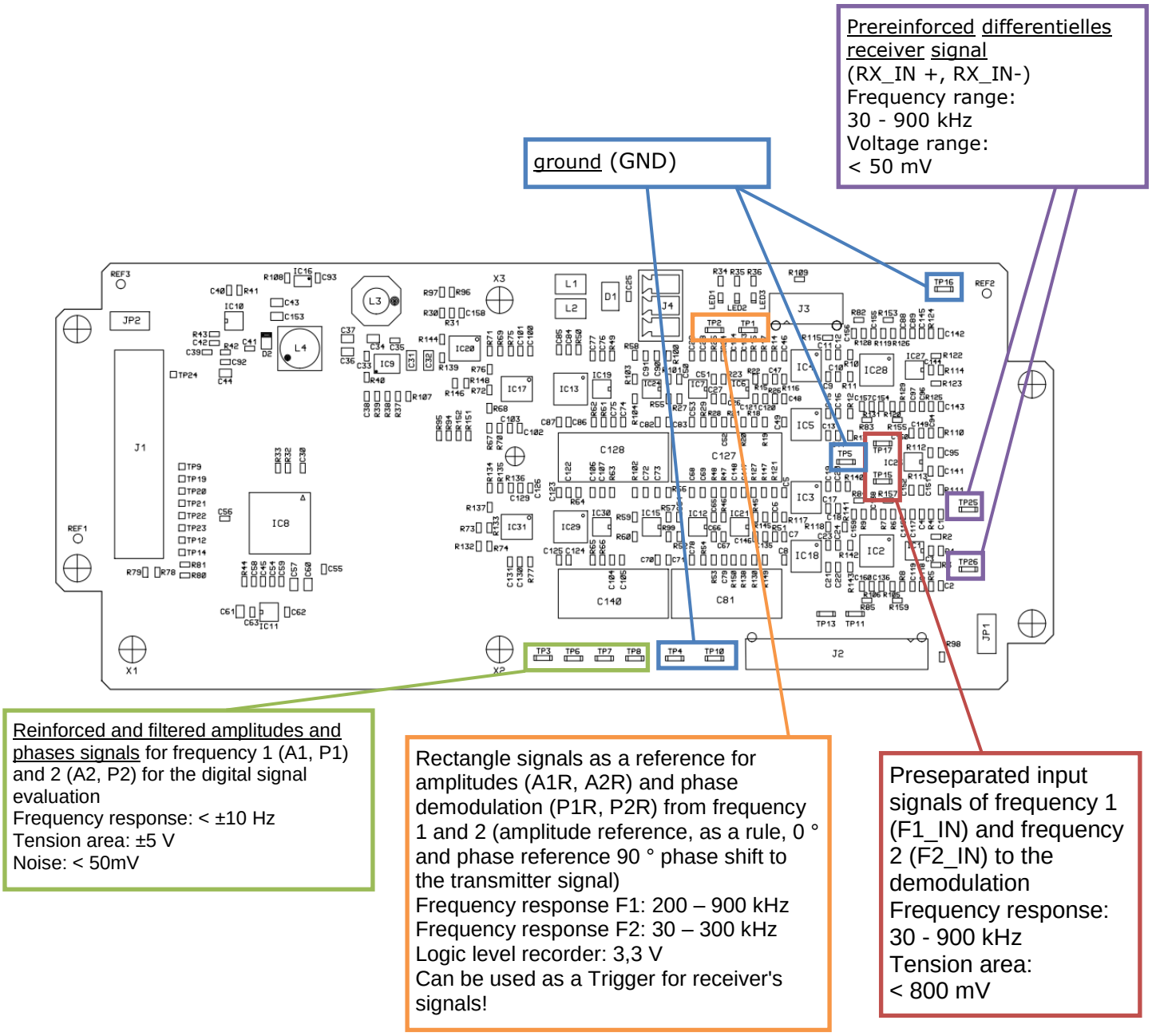

DEM-Modul

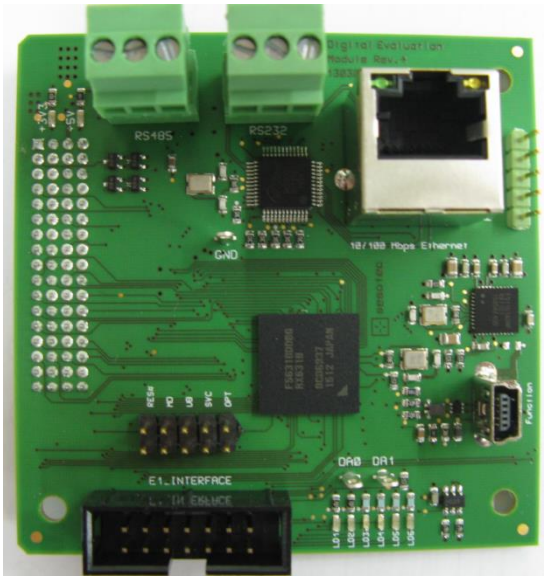

1.3.3 Overview DEM

1.3.3.1 Front view:

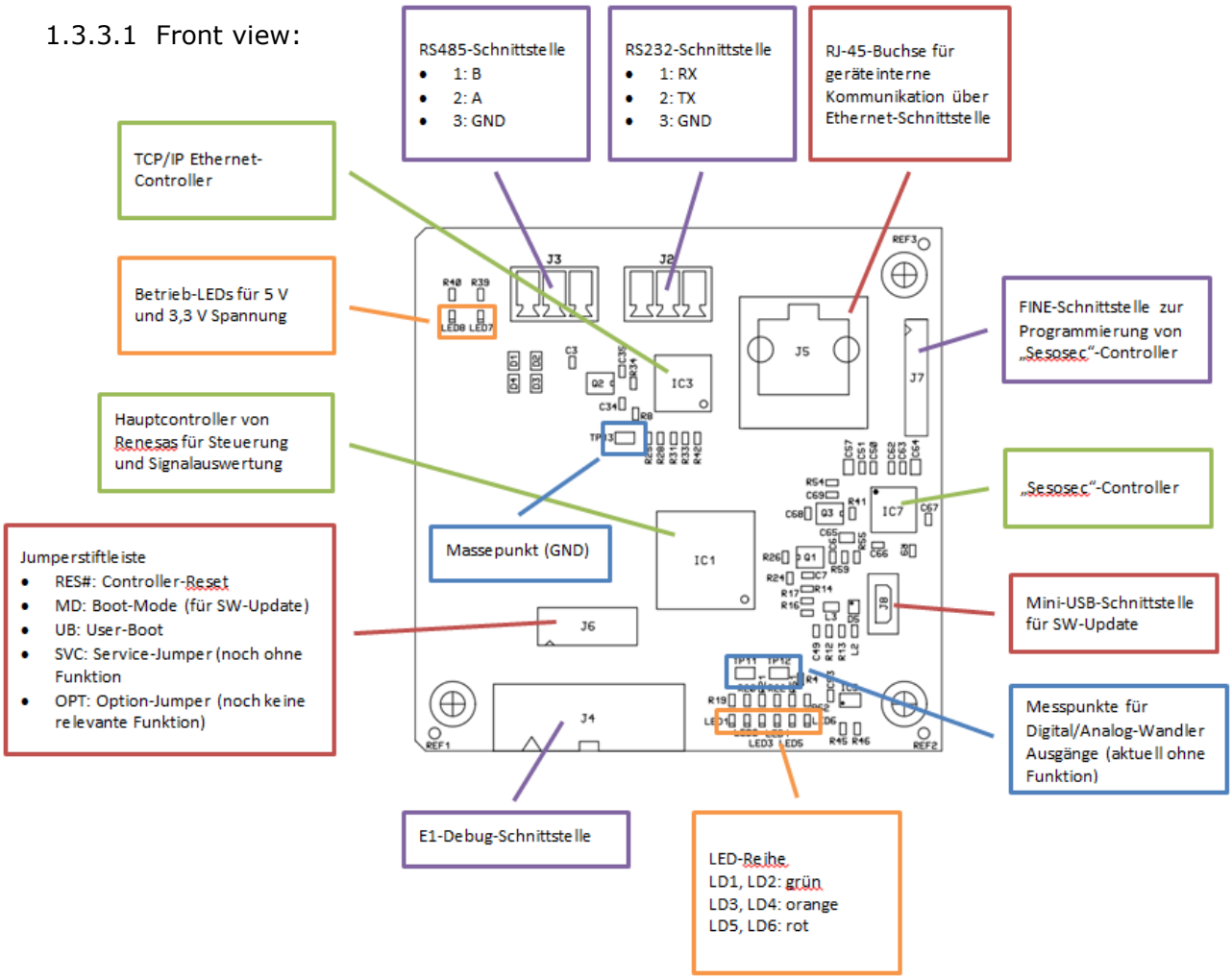

Overview LED line

LED1	green	**On**: after system configuration (boot) or after product change **Off**: while system configuration not valid or inactive (e. g. , during product changes or teach in process)
LED2	green	**Flash**: system monitoring OK (1,75 s)
LED3	yellow	**On**: by initialization of the signal processing **Flash**: by active signal processing (125 ms) **Off**: if signal processing inactive
LED4	yellow	**Flash**: by warnings of system monitoring (1. 75 s) **On**: by communication errors (Ethernet)
LED5	red	Metal-LED (on for approx. 300 ms in metal events)
LED6	red	**Flash**: error of system monitoring (1. 75 s) by a serious errors

1.3.3.2 Back view:

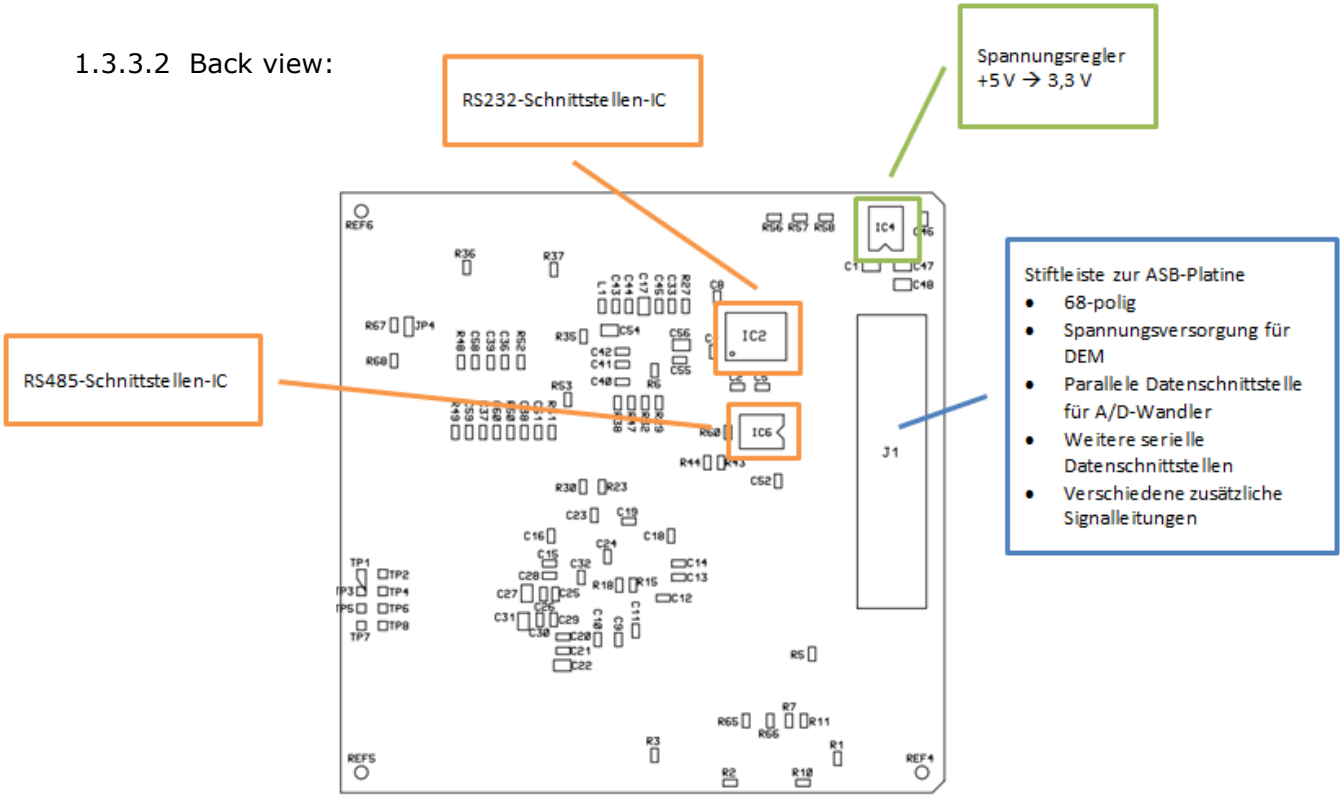

1.4 Receiver Board

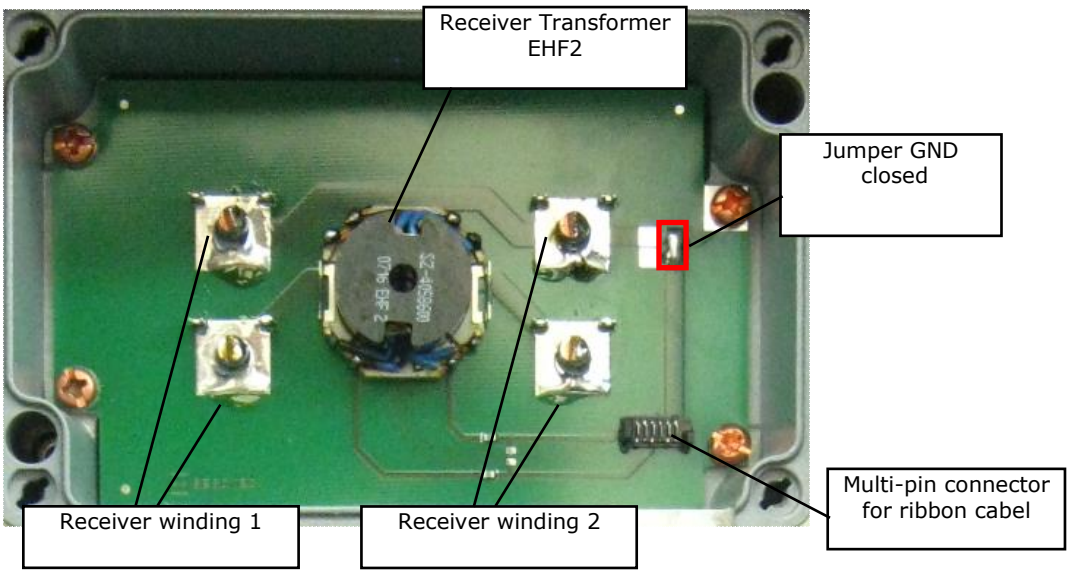

For the electric symmetric of the receiver voltage between the 1st and/or 2nd receiver winding (1 – 5. 6pF) and/or opposition (54 – 910kΩ) are soldered.

2 Overview of the control system

2.1 IO Board

2.1.1 Set up and effectiveness

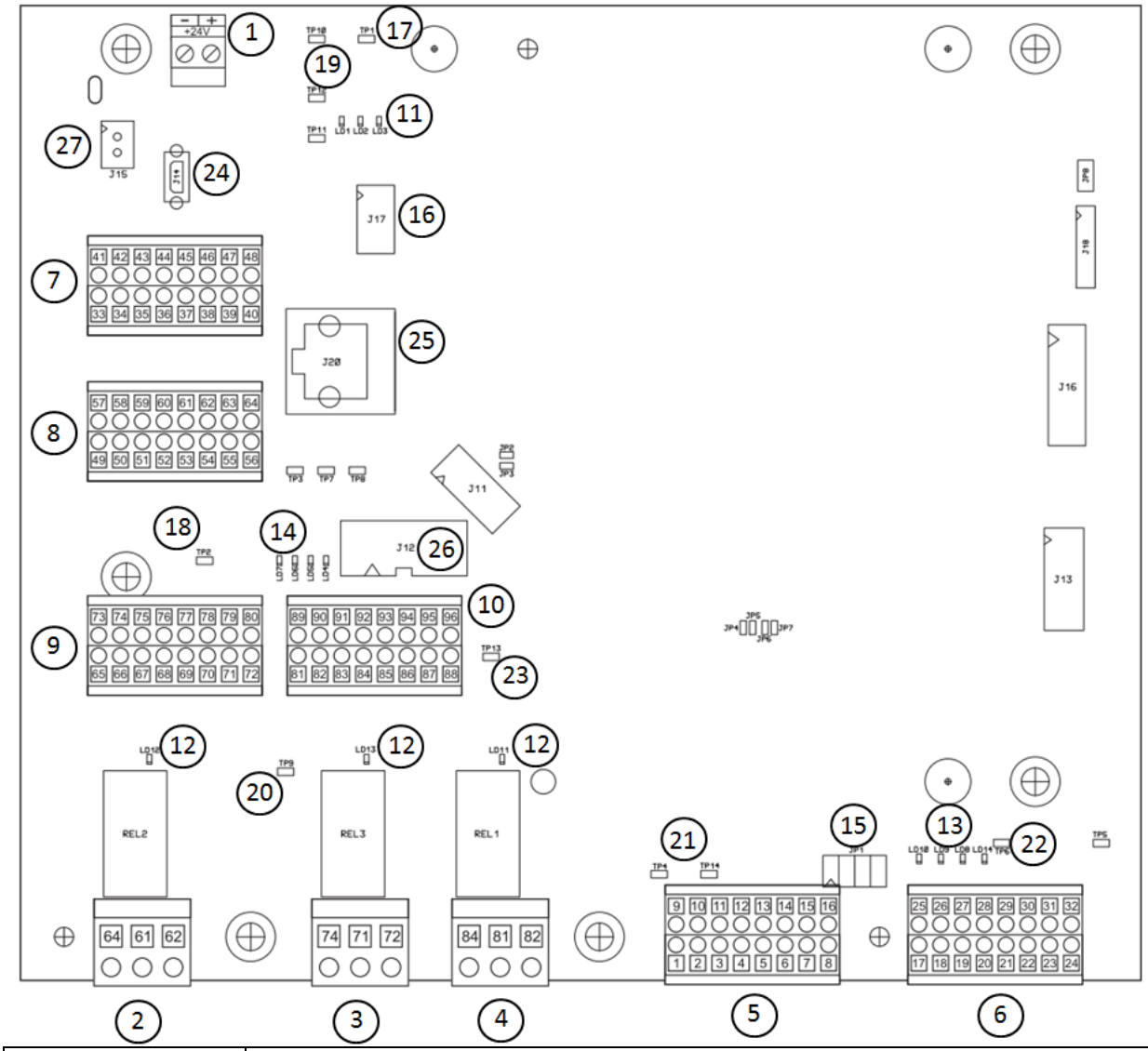

Plug and connections:	(1) "tension care"	J1, 24 V of tension care
	(2) "Relay metal 1"	potential free contact
	(3) "Relay metal 2"	potential free contact
	(4) "Relay mistake"	potential free contact
	(5) "Switch exits"	J5, connection Free University, release, metal counter,
	(6) "Switch exits"	J6, connection MV, signal combination
	(7) "Switch entrances"	J7, M+S, sensors, switches
	(8) "Switch entrances"	J8, sensors, switches
	(9) "Switch entrances"	J9, sensors, switches
	(10) "Switch entrances"	J10, metal signal, Dig entrances, product changes

Elements that may be live with external voltage:	(2) „Plug, Relais-Metal 1“ (3) „Plug, Relais-Metal 2“ (4) „Plug, Relais-Fault“	Vorsicht Fremd-spannung
LED:	(11) „Monitor LED, Vcc“ (12) „Monitor LED, Relais (13) „Monitor LED, MV 1-4“ (14) „Monitor LED“	LD1, +24V LD2, +10V LD3, +3,3V LD11, Relais Fault (84, 81, 82) LD12, Relais Metall 1 (64, 61, 62) LD13, Relais Metall 2 (74, 71, 72) LD10, Magnet valve (MV1) LD9, Magnet valve (MV2) LD8, Magnet valve (MV3) LD14, Magnet valve (MV4) Status for intern
Jumper:	(15) „MV-Connection Monitoring“ (16) „Service-Jumper“	JP1, 1-2, MV1 JP1, 3-4, MV2 JP1, 5-6, MV3 JP1, 7-8, MV4 J17, 5-6, connect for Program-Update USB Typ B
Test points:	(17) „GND“ (18) „GND_24“ (19) „Voltage“ (20) „AN_IN“ (21) „AN_OUT“ (22) „MV-Hold“ (23) „MET_INT“	TP1, IO-Board TP8, Magnet valve (MV1 - MV4) TP10, 3,3V TP11, 10V TP12, 5,5V TP9, Analog Input Voltage (0 – 10V) TP4, Analog Output Voltage 1 (0 – 10V) TP14, Analog Output Voltage 2 (0 – 10V) TP6, Self-Holding Voltage for Magnet Valve TP13, Metal interrupt
Interface:	(24) „Program-update“ (25) „Communication“ (26) „Service-Interface	J14, Mini-USB, (only for trained personal) J20, Ethernet connection to a Control-Unit J12, RS232 interface (option
Memory:	(27) "System memory"	J15, (only required for internal functions)

2.1.2 Intuity / IO-Board

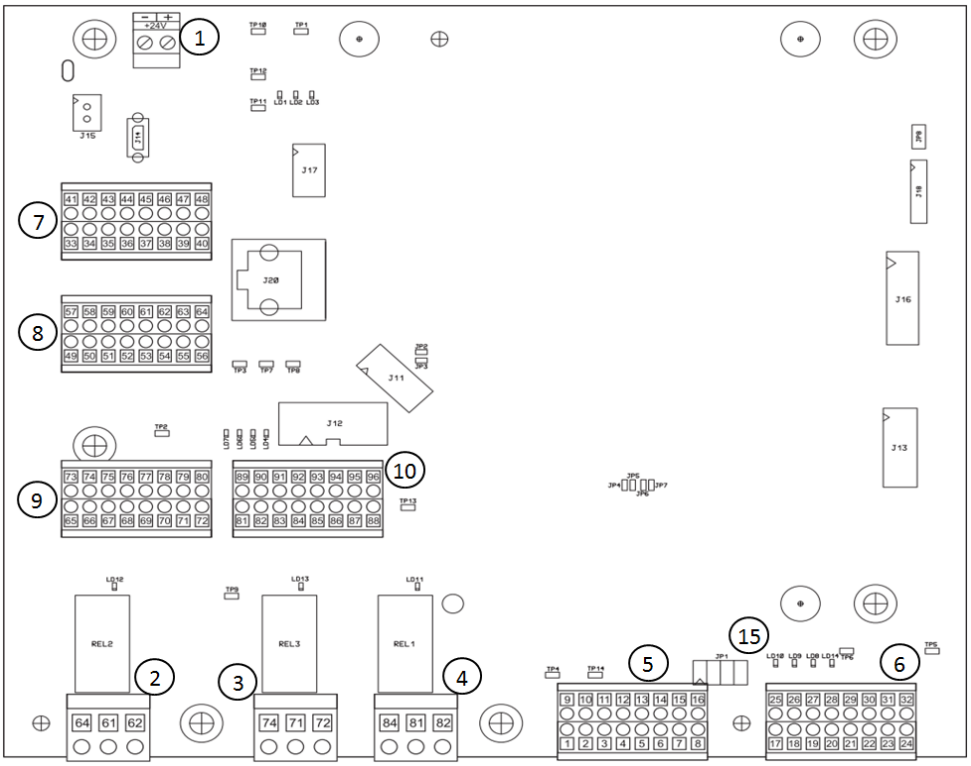

Pos.	Connection	Type of connection	Function
(1)	+24V	Power supply	24V power supply
(2)	„Relais-Metal 1“	Potential-free change-over contact	Normal : Contact 61 und 62 close By Metal: Contact 61 und 64 close
(3)	„Relais-Metal 2“	Potential-free change-over contact	Normalbetrieb: Contact 71 und 72 close Bei Metal: Contact 71 und 74 close
(4)	„Relais-Fault“	Potential-free change-over contact	Operating: Contact 81 und 84 close By Fault: Contact 81 und 82 close
(5)	„Outputs“	Output 24V Analog Outputs 0-10V	

J5							
9	10	11	12	13	14	15	16
GND	GND	GND	GND	GND	GND	GND	GND
DA0	DA1	FUR	FUL	FREI	MZ	OUT1	OUT2
1	2	3	4	5	6	7	8

J5	Switching functions (↓ =24V to GND or ↑ = 0V to 24V)
1 – 9	DA0, analog output (0 – 10V)
2 – 10	DA1, analog output (0 – 10V)
3 – 11	↑, frequency inverter clockwise
4 – 12	↑, frequency inverter anti-clockw.
5 – 13	↑, enable signal
6 – 14	↑, metal counter
7 – 15	↑, configurable output
8 – 16	↑, configurable output

Pos.	Connection	Type of connection	Function
(6)	„Outputs“	Switching outputs 24V	

J6							
25	26	27	28	29	30	31	32
GND	GND	GND	GND	24V	24V	24V	24V
MV1	MV2	MV3	MV4	LM	LB	LF	LA
17	18	19	20	21	22	23	24

J6	Switching functions MV = Magnet valve connection (↓ =24V to GND or ↑ = 0V to 24V)
17 – 25	↓ or ↑, MV1, (depending on setup)
18 – 26	↓ or ↑, MV2, (depending on setup)
19 – 27	↓ or ↑, MV3, (depending on setup)
20 – 28	↓ or ↑, MV4, (depending on setup)
21 – 29	↓, LM: Lamp Metal
22 – 30	↓, LB: Lamp Operation
23 – 31	↓, LF: Lamp Fault
24 – 32	↓, LA: Lamp Audit check

(7) "Inputs" — Switching inputs 24V

J7							
41	42	43	44	45	46	47	48
24V	AK	24V	24V	AÜ	24V	ST	24V
GND	BIN	GND	GND	FS	GND	SY	GND
33	34	35	36	37	38	39	40

J7	Switching functions 24V, PNP switching	
33 – 34 – 41	BIN:	Bin Lock/Bin Monitoring
35 – 42 – 43	AK:	Reject check
36 – 37 – 44	FS:	Level monitoring
38 – 45 – 46	AÜ:	Reject monitoring
38 – 39 – 46	SY:	LB sync
40 – 47 – 48	ST:	Conveyor start

(8) "Inputs" — Switching inputs 24V

J8							
57	58	59	60	61	62	63	64
24V	24V	R/L	24V	24V	24V	24V	24V
STO	TRI	St/St	TK	INI1	INI2	DRU	FE
49	50	51	52	53	54	55	56

J8	Switching functions 24V, PNP switching	
49 – 57	STO:	Conveyor stop
50 – 58	TRI:	Trigger LB
51 – 58	St/St:	Start/Stop edge-controlled
59 – 60	R/L:	FI clockwise/anti-clockwise
52 – 60	TK:	Thermocontact motor
53 – 61	INI1:	Initiator 1 (not used)
54 – 62	INI2:	Initiator 2 (not used)
55 – 63	DRU:	Air pressure monitoring
56 – 64	FE:	Fault external

(9) "Inputs" — Switching inputs 24V

J9							
73	74	75	76	77	78	79	80
24V	24V	24V	24V	GND	24V	24V	24V
BYP	AM	AUD	KüG	KüS	AE	TT	RE
65	66	67	68	69	70	71	72

J9	Switching functions 24V, PNP switching	
65 – 73	BYP:	Bypass
66 – 74	AM:	Eject manually
67 – 75	AUD:	Audit check external
68 – 76 – 77	KüG:	Flap monitoring accept position (reserved)
69 – 76 – 77	KüS:	Flap monitoring reject position (reserved)
70 – 78	AE:	Eject external
71 – 79	TT:	Test key (reserved)
72 – 80	RE:	Reset external

Pos.	Connection	Type of connection	Function
(10)	"Inputs"	Switching inputs 24V	

J10							
89	90	91	92	93	94	95	96
MET	DI1	DI3	AN	24V	IN1	IN3	24V
GND	DI2	DI4	GND	GND	IN2	IN4	GND
81	82	83	84	85	86	87	88

J10	Switching functions 24V, PNP switching 24V, NPN or PNP switching 0-10V, Analog_In	
89	MET:	Metal interrupt (RS232)
82,83,90,91	DI1 – 4:	Product change
84 – 82	AN:	Analog input (0 – 10V)
86,87,94,95	IN1 – 4:	Configurable inputs PNP or NPN

(15) "Jumper JP1" — Placement, connection monitoring MV1 – MV4 active/inactive

JP1	Functions Jumper plugged, monitoring inactive Jumper open, monitoring active
1 – 2	MV1 connection monitoring
3 – 4	MV2 connection monitoring
4 – 6	MV3 connection monitoring
7 – 8	MV4 connection monitoring